US006542654B1

(12) **United States Patent**
Miller et al.

(10) **Patent No.: US 6,542,654 B1**
(45) **Date of Patent: Apr. 1, 2003**

(54) **RECONFIGURABLE OPTICAL SWITCH AND METHOD**

(75) Inventors: **Robert O. Miller**, Carrollton, TX (US); **Jeffrey A. Reed**, Garland, TX (US)

(73) Assignee: **Optical Switch Corporation**, Richardson, TX (US)

(*) Notice: Subject to any disclaimer, the term of this patent is extended or adjusted under 35 U.S.C. 154(b) by 0 days.

(21) Appl. No.: **09/902,908**

(22) Filed: **Jul. 10, 2001**

(51) **Int. Cl.**[7] **G02B 6/26**; G02B 6/00

(52) **U.S. Cl.** **385/16**; 385/15; 385/17; 385/122

(58) **Field of Search** 385/15, 16, 17, 385/14, 129, 130, 131, 122, 125, 40; 359/241

(56) **References Cited**

U.S. PATENT DOCUMENTS

5,045,897 A		9/1991	Ahlgren	357/17
5,525,541 A		6/1996	Krauz et al.	437/161
5,543,353 A		8/1996	Suzuki et al.	437/127
5,910,256 A		6/1999	Tsunetomo et al.	216/24
5,955,749 A		9/1999	Joannopoulos et al.	257/98
5,973,823 A		10/1999	Koops et al.	359/322
5,990,850 A		11/1999	Brown et al.	343/912
5,999,308 A		12/1999	Nelson et al.	359/321
6,064,506 A		5/2000	Koops	359/237
6,064,511 A		5/2000	Fortmann et al.	359/321
6,075,915 A		6/2000	Koops et al.	385/125
6,175,671 B1		1/2001	Roberts	385/14
6,456,416 B1	*	9/2002	Ichimura et al.	359/241
2001/0026659 A1	*	10/2001	Sekine et al.	385/40
2001/0026668 A1	*	10/2001	Yamada	385/125

OTHER PUBLICATIONS

I. El–Kady et al., "Metallic Photonic Crystals at Optical Wavelengths," Physical Review B, vol. 62, No. 23, p. 299–302, Dec. 15, 2000.

B. Temelkuran et al., "Experimental Investigation of Layer–by–Layer Metallic Photonic Crystals," IEE Proceedings, vol. 145, No. 6, p. 409–414, Dec. 1998.

K. M. Ho et al., "Photonics Band Gaps in Three Dimensions: New Layer–by–Layer Periodic Structures," Solid State Communications, vol. 89, No. 5, p. 413–416, 1994.

K. M. Ho et al., "Existence of a Photonic Gap in Periodic Dielectric Structures," Physical Review Letters, vol. 65, No. 25, p. 3152–3155, Dec. 17, 1990.

* cited by examiner

Primary Examiner—Georgia Epps
Assistant Examiner—Jack Dinh
(74) *Attorney, Agent, or Firm*—Baker Botts L.L.P.

(57) **ABSTRACT**

A method for reconfiguring an optical switch includes selecting a first path through a photonic crystal. The crystal includes the first path having a plurality of first regions and a second path having a plurality of second regions. The crystal also includes a third path that provides an optical signal for propagation through one of the first and second paths. The method also includes heating at least one of the first regions and at least one of the second regions. The method further includes cooling the first region at a first rate to place the first region in a first state. The first state allows propagation of the optical signal through at least a portion of the crystal. In addition, the method includes cooling the second region at a second rate to place the second region in a second state. The second state reduces the propagation of the optical signal through at least a portion of the crystal.

35 Claims, 5 Drawing Sheets

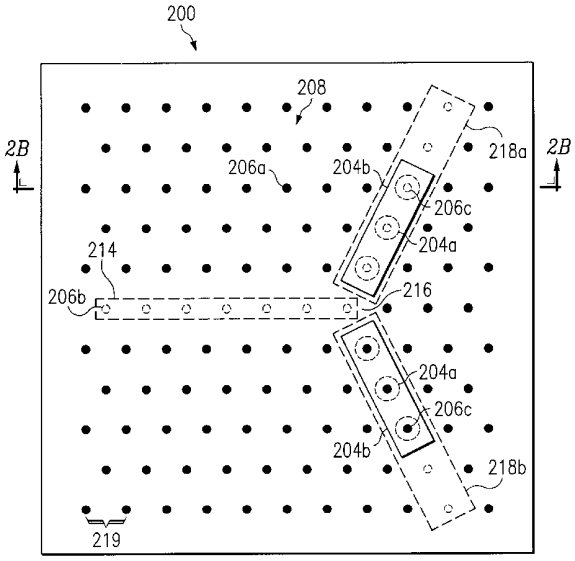

Copy provided by USPTO from the PIRS Image Database on 04-03-2003

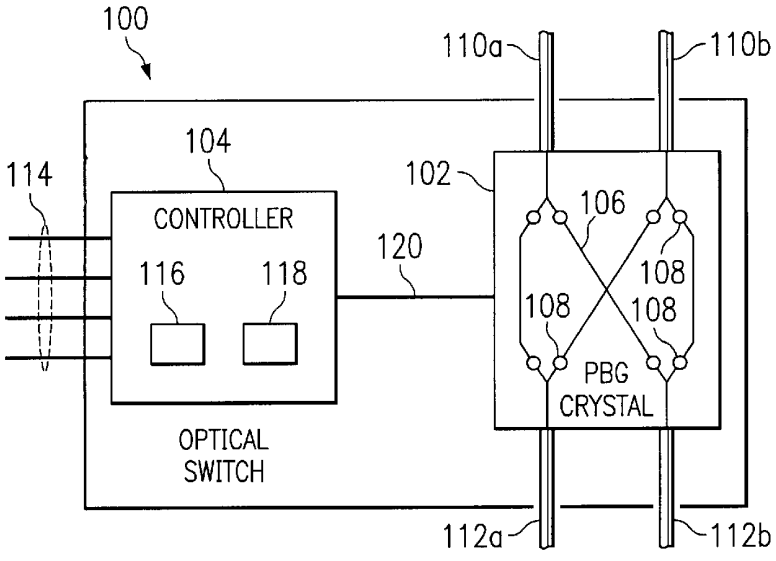

FIG. 1

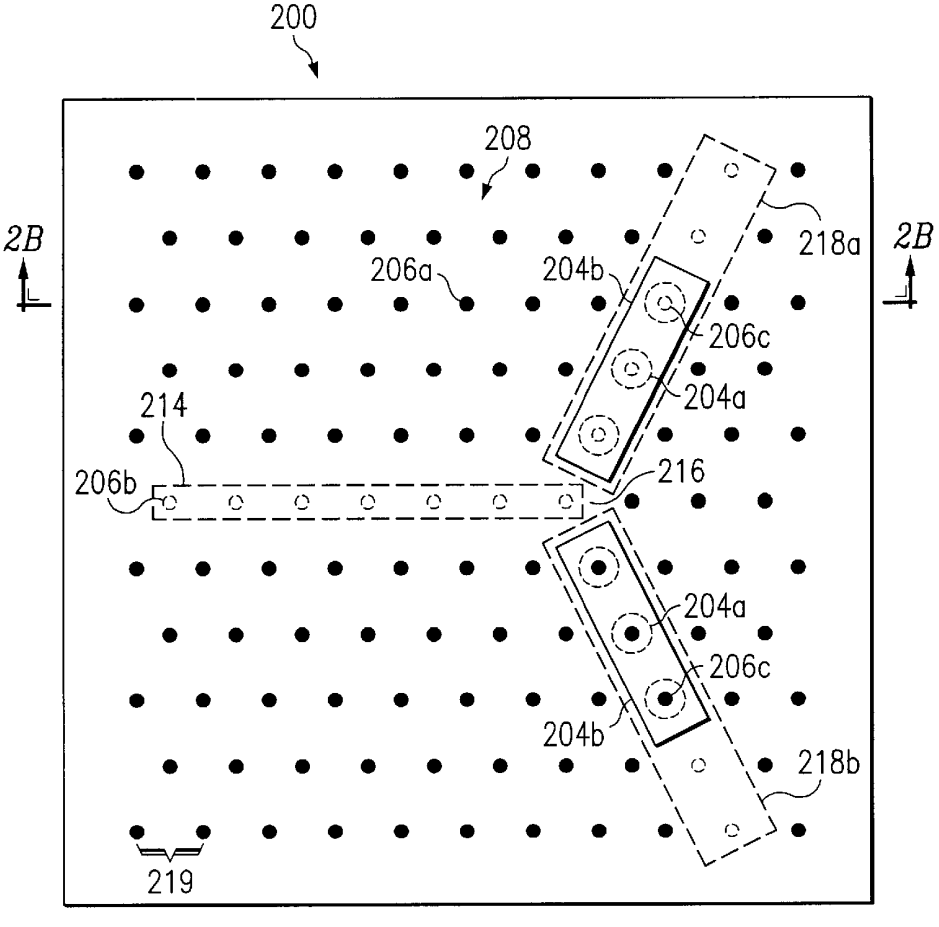

FIG. 2A

Copy provided by USPTO from the PIRS Image Database on 04-03-2003

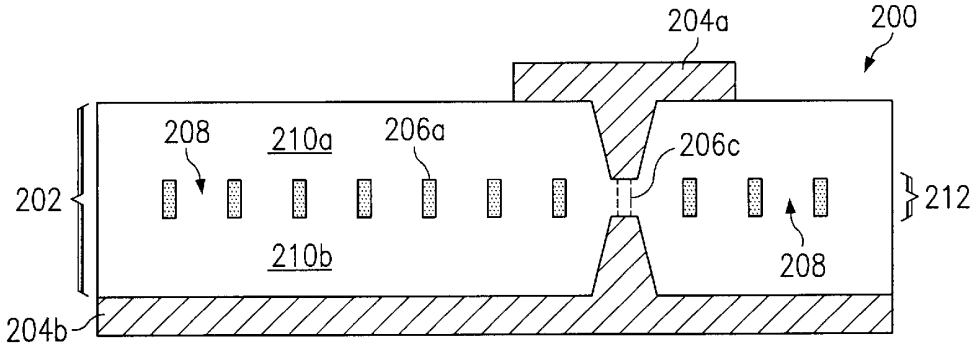

FIG. 2B

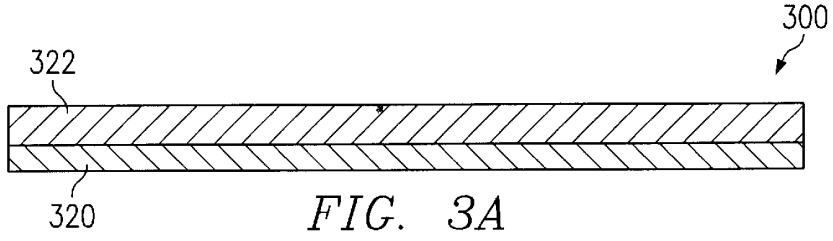

FIG. 3A

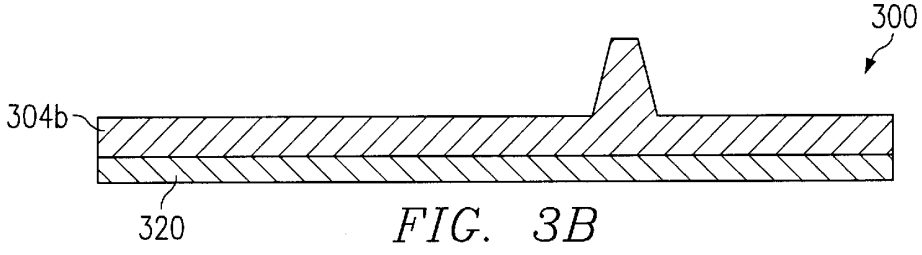

FIG. 3B

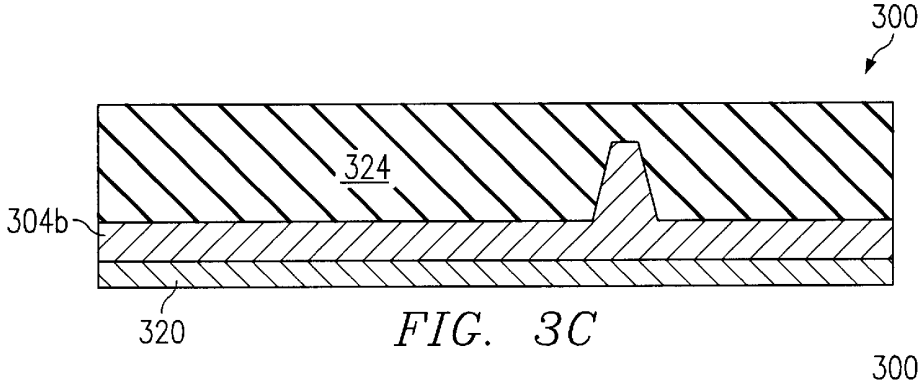

FIG. 3C

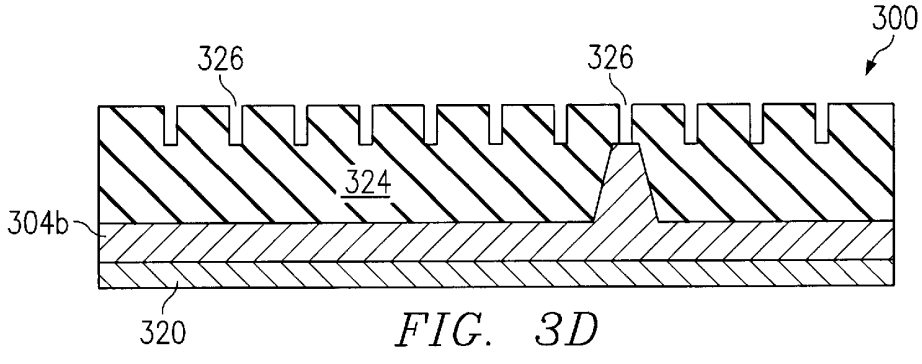

FIG. 3D

Copy provided by USPTO from the PIRS Image Database on 04-03-2003

FIG. 3E

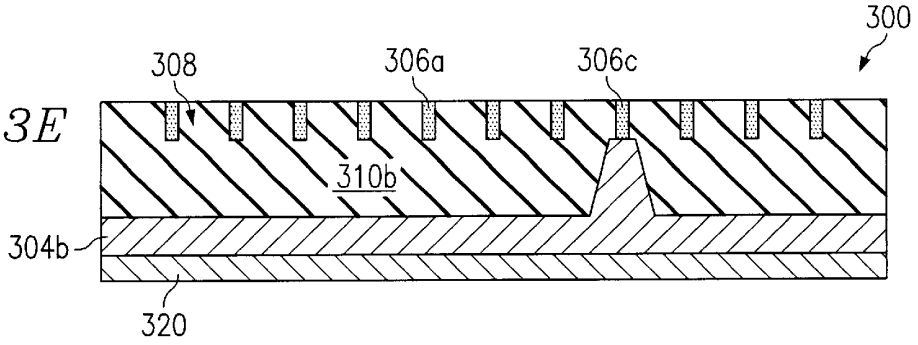

FIG. 3F

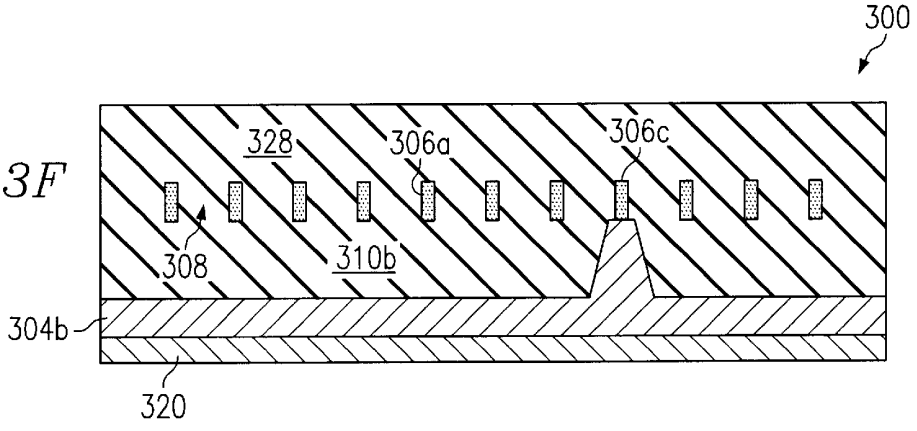

FIG. 3G

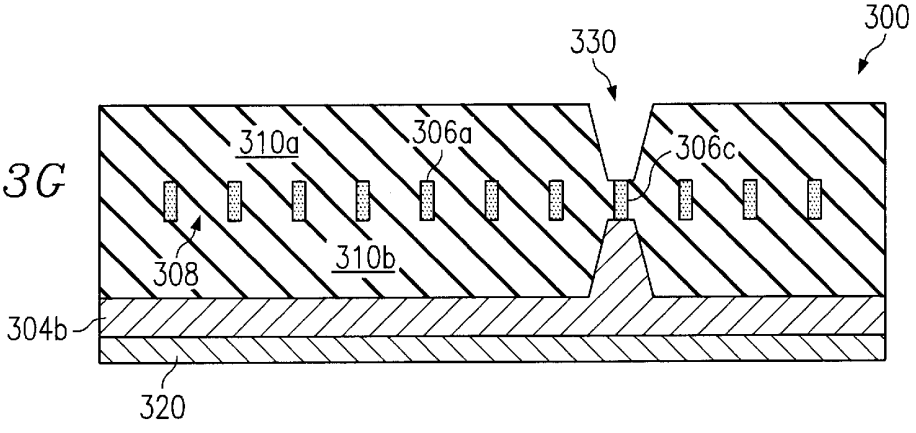

FIG. 3H

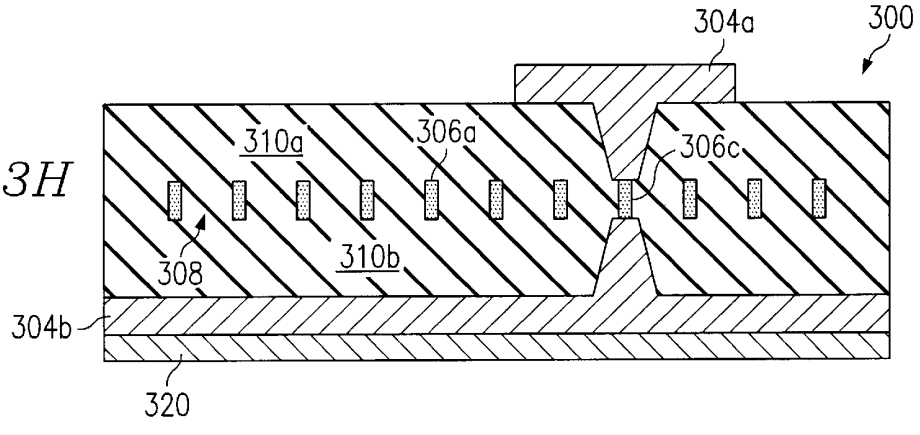

Copy provided by USPTO from the PIRS Image Database on 04-03-2003

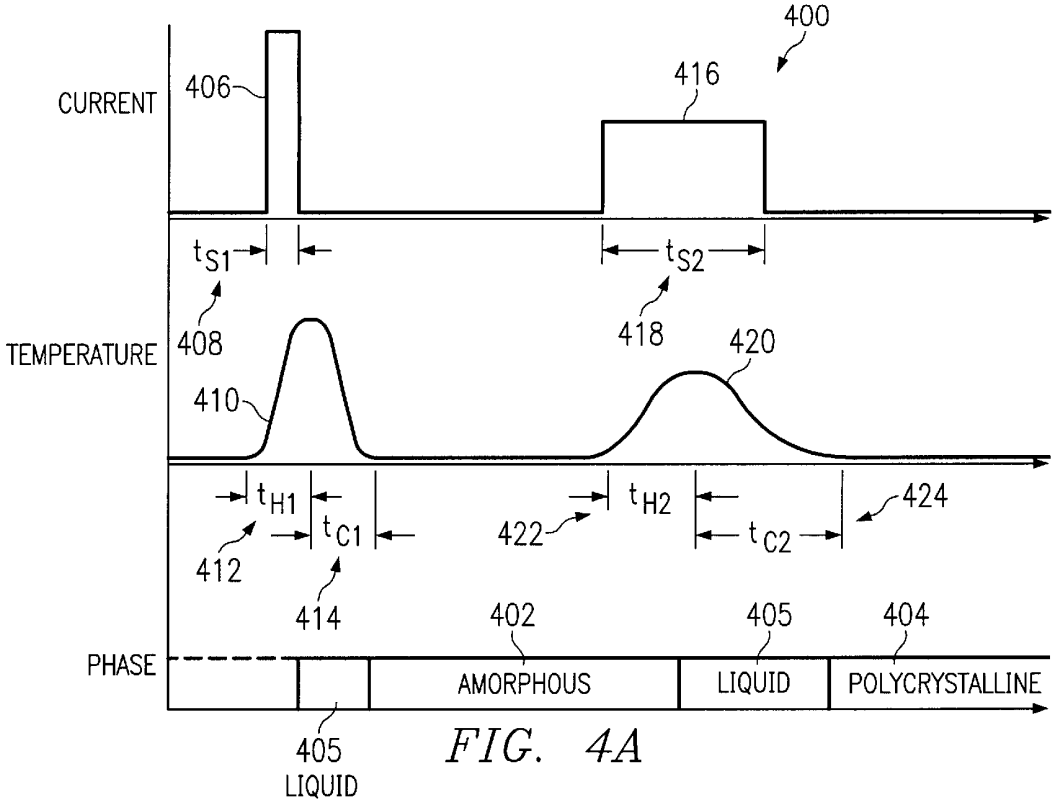

FIG. 4A

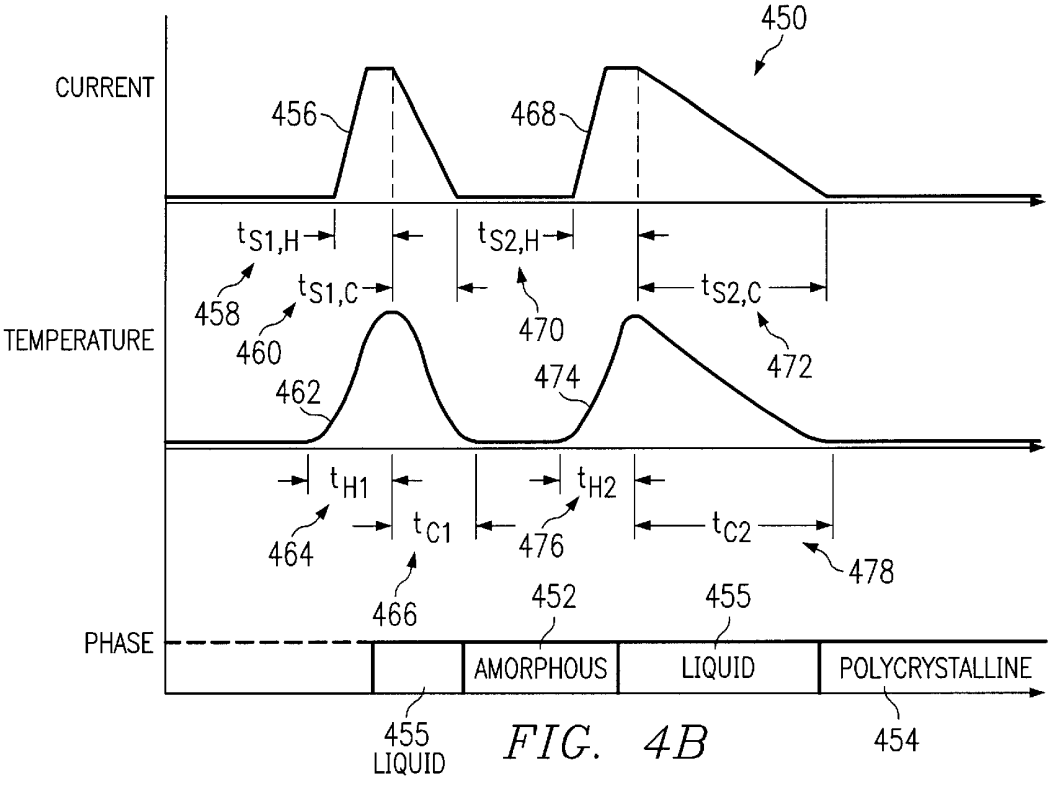

FIG. 4B

Copy provided by USPTO from the PIRS Image Database on 04-03-2003

FIG. 5

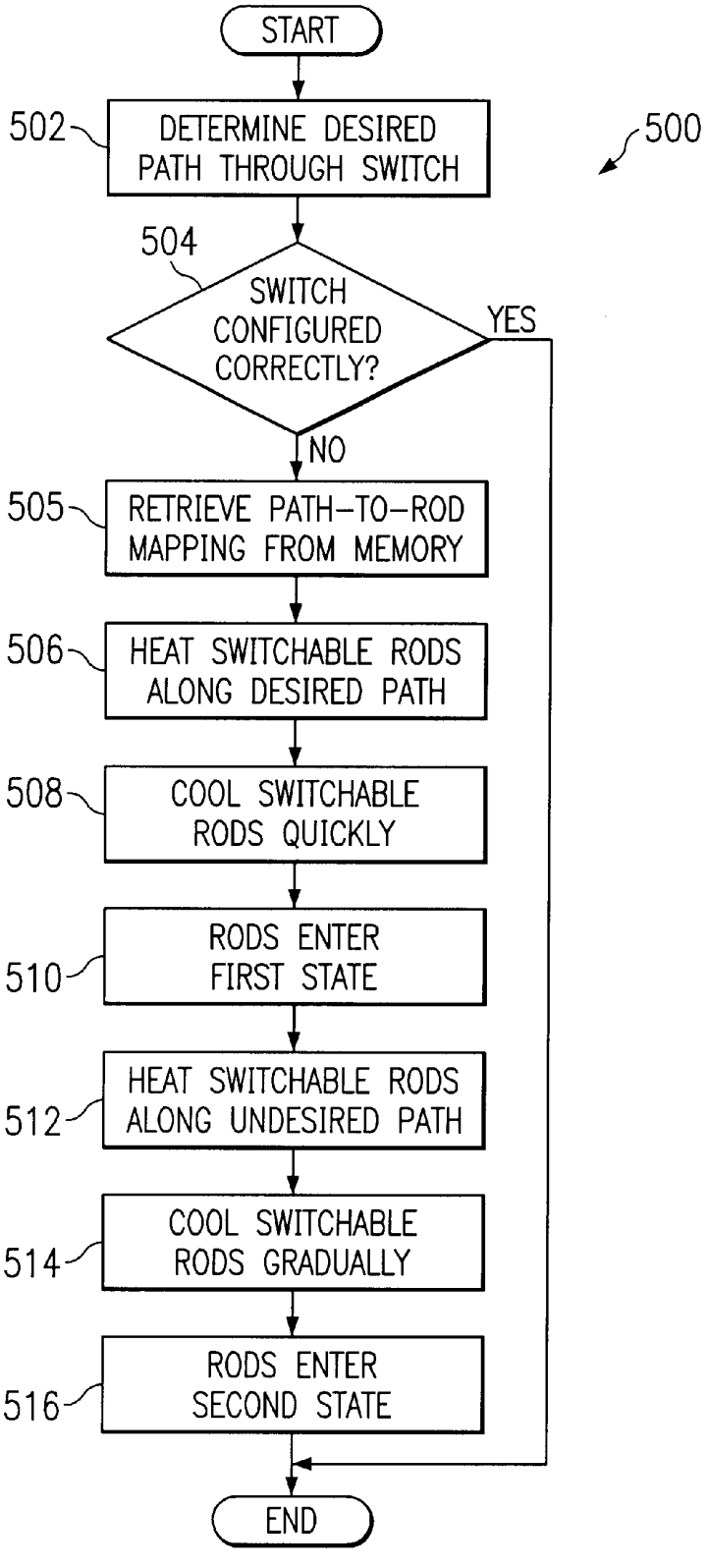

Copy provided by USPTO from the PIRS Image Database on 04-03-2003

RECONFIGURABLE OPTICAL SWITCH AND METHOD

RELATED APPLICATIONS

This application is related to:

U.S. application Ser. No. 09/898,926 filed on Jul. 3, 2001 for a "Reconfigurable Optical Device and Method"; and

U.S. application Ser. No. 09/902,858 filed on Jul. 10, 2001 for a "Method for Making a Reconfigurable Optical Switch."

TECHNICAL FIELD OF THE INVENTION

This invention relates generally to the field of optical devices, and more specifically to a reconfigurable optical switch and method.

BACKGROUND OF THE INVENTION

Photonic crystals may be used to manipulate light in optical devices, such as photonic bandgap devices. A photonic crystal typically includes regions periodically composed of materials with different refractive indices. The periodic changes in the refractive index of the crystal prevent light within a certain range or "band" of frequencies from entering or leaving the crystal. The band of frequencies that cannot propagate through the crystal may be referred to as a "bandgap." To allow light within this band of frequencies to pass through certain paths in the photonic crystal, defects are created in the crystal. These defects represent points where the periodic changes in the refractive index of the crystal have been interrupted, which breaks the symmetry of the crystal. As a result of these defects, light may exist in localized states within the bandgap. Sequences of defects allow light within the bandgap to propagate through the crystal in paths created by the defects. These paths may be referred to as "waveguides." The waveguides control how light is transported through the crystal, so the waveguides control how the optical device operates.

SUMMARY OF THE INVENTION

According to the present invention, problems and disadvantages associated with previous optical switches and methods have been substantially reduced or eliminated.

In one embodiment of the invention, an optical switch includes a photonic crystal and a controller. The photonic crystal includes a first path having a plurality of first regions. At least one of the first regions is set to a first state to allow an optical signal to propagate through at least a portion of the crystal. The photonic crystal also includes a second path having a plurality of second regions. At least one of the second regions is set to the first state. The photonic crystal further includes a third path coupling the first path and the second path and providing the optical signal for propagation through at least one of the first and second paths. In addition, the photonic crystal includes a first actuator coupled to at least one of the first regions, and a second actuator coupled to at least one of the second regions. The controller is coupled to the first and second actuators. The controller is operable to switch the first and second regions between the first state and a second state. The second state reduces the propagation of the optical signal through at least a portion of the crystal.

In another embodiment of the invention, a photonic crystal includes a first path having a plurality of first regions. At least one of the first regions is set to a first state to allow an optical signal to propagate through at least a portion of the crystal. The photonic crystal also includes a second path having a plurality of second regions. At least one of the second regions is set to the first state. The photonic crystal further includes a third path coupling the first path and the second path and providing the optical signal for propagation through at least one of the first and second paths. The photonic crystal also includes a first actuator coupled to at least one of the first regions. The first actuator is operable to switch the first region between the first state and a second state. The second state reduces the propagation of the optical signal through at least a portion of the crystal. In addition, the photonic crystal includes a second actuator coupled to at least one of the second regions. The second actuator is operable to switch the second region between the first state and the second state.

In yet another embodiment of the invention, a method for reconfiguring an optical switch includes selecting a first path through a photonic crystal. The crystal includes the first path and a second path. The first path includes a plurality of first regions, and the second path includes a plurality of second regions. The crystal also includes a third path coupling the first path and the second path and providing an optical signal for propagation through one of the first and second paths. The method also includes heating at least one of the first regions and at least one of the second regions. The method further includes cooling the first region at a first rate to place the first region in a first state. The first state allows propagation of the optical signal through at least a portion of the crystal. In addition, the method includes cooling the second region at a second rate to place the second region in a second state. The second state reduces the propagation of the optical signal through at least a portion of the crystal.

Numerous technical advantages are provided according to various embodiments of the present invention. Particular embodiments of the invention may exhibit none, some, or all of the following advantages depending on the implementation. For example, the present invention may allow waveguides in an optical switch to be reconfigured. In one embodiment, a photonic crystal includes rods of a material, such as a chalcogenide. At least one of the rods may switch between a first state and a second state. In the first state, a defect forms in the photonic crystal, and an optical signal may propagate through at least a portion of the crystal. In the second state, no defect forms around the rod, which reduces the propagation of the optical signal through at least a portion of the crystal. In a particular embodiment, a defect may be formed by heating a rod and cooling the rod at one rate, and a defect may be removed by heating the rod and cooling the rod at another rate. By switching the states of the rods, the present invention allows the waveguides in a photonic crystal to be reconfigured. This allows the optical switch to be reconfigured so that the switch may route optical signals to different destinations.

The present invention may also allow the waveguides in the optical switch to be reconfigured more easily than conventional systems. For example, the present invention may vary the refractive index of the rods to a greater degree than previous systems could achieve. The present invention may also change the refractive index of the rods faster than conventional systems.

Other technical advantages are readily apparent to one of skill in the art from the attached figures, description, and claims.

BRIEF DESCRIPTION OF THE DRAWINGS

To provide a more complete understanding of the present invention and features and advantages thereof, reference is

Copy provided by USPTO from the PIRS Image Database on 04-03-2003

made to the following description in conjunction with the accompanying drawings, in which:

FIG. **1** is a block diagram illustrating an exemplary optical switch constructed according to the teachings of the present invention;

FIGS. **2**A and **2**B are block diagrams illustrating portions of an exemplary photonic crystal constructed according to the teachings of the present invention;

FIGS. **3**A–**3**H are block diagrams illustrating an exemplary series of steps in manufacturing a photonic crystal;

FIGS. **4**A and **4**B are timing diagrams illustrating the reconfiguration of a photonic crystal according to the teachings of the present invention; and

FIG. **5** is a flow diagram illustrating an exemplary method for reconfiguring an optical switch according to the teachings of the present invention.

DETAILED DESCRIPTION OF EXAMPLE EMBODIMENTS

FIG. **1** is a block diagram illustrating an exemplary optical switch **100** constructed according to the teachings of the present invention. In the illustrated embodiment, switch **100** includes a photonic bandgap (PBG) crystal **102** and a controller **104**. Other embodiments of switch **100** may be used without departing from the scope of the present invention.

In one aspect of operation, crystal **102** contains waveguides **106**. Waveguides **106** represent areas of crystal **102** where light may exist in and propagate through defects in crystal **102**. In one embodiment, crystal **102** includes one or more rods **108** operable to switch between at least a first state and a second state. Rods **108** that are operable to change states may be referred to as "switchable" rods. A defect exists in crystal **102** when rod **108** is in the first state, and light may exist in and propagate through the defect. A defect is removed from crystal **102** by switching rod **108** from the first state to the second state, which reduces or eliminates the propagation of light through that rod **108**. In a particular embodiment, defects in crystal **102** may be formed by heating and cooling rod **108** at one rate, and defects may be removed in crystal **102** by heating and cooling rod **108** at another rate. By changing the states of rods **108**, crystal **102** may be reconfigured to perform different switching functions. For example, by reconfiguring waveguides **106**, switch **100** could reconfigure crystal **102** to route input signals from input lines **110***a*–**110***b* (referred to generally as input lines **110**) to different output lines **112***a*–**112***b* (referred to generally as output lines **112**). Other embodiments and/or uses of crystal **102** may be used without departing from the scope of the present invention. In the illustrated embodiment, crystal **102** has been simplified to illustrate the various components of crystal **102**. For example, crystal **102** may include any suitable number of waveguides **106** and rods **108** without departing from the scope of the present invention. Also, crystal **102** may receive input signals from any number of input lines **110** and deliver optical signals to any number of output lines **112**.

Crystal **102** is coupled to controller **104**. In this document, the term "couple" refers to any direct or indirect communication between two or more elements, whether or not those elements are in physical contact with one another. Also, the term "crystal" refers to any structure or structures operable to receive and route optical signals, such as a photonic bandgap crystal. In addition, the term "photonic bandgap" refers to an ability to reduce or eliminate the propagation of light within a range or "band" of frequencies. Crystal **102** receives input optical signals from at least one input line **110** and routes the signals to one or more output lines **112**. The routing of signals from input line **110** to output line **112** is conducted by the waveguides **106** in crystal **102**. For example, an input signal from input line **110***a* may be routed to output line **112***a* or output line **112***b*, depending on which waveguide **106** is set to allow an optical signal to pass. By adjusting the states of one or more rods **108**, crystal **102** may perform different switching functions in switch **100**. Crystal **102** may comprise any suitable structure operable to perform switching functions in switch **100**. One embodiment of a crystal is shown in FIGS. **2**A and **2**B, which are described below.

In the illustrated embodiment, crystal **102** includes a plurality of rods **108**. Rods **108** represent regions where the refractive index of the region may be altered to create and/or remove defects in crystal **102**. In this document, the term "rod" refers to any structure or structures having any suitable size, shape, and/or arrangement and operable to switch between at least a first state and a second state. In one embodiment, the first state is associated with a refractive index that creates a defect in crystal **102**, and the second state is associated with a refractive index that does not create a defect in crystal **102**. In this embodiment, rod **108** may remain fixed or "latched" in one state until driven into another state.

Rods **108** may comprise any suitable material or materials operable to switch between at least a first state and a second state. Rods **108** may, for example, comprise a chalcogenide, such as $Ge_2Sb_2Te_5$. The chalcogenide may form part or all of rod **108**. In this embodiment, the chalcogenide in rod **108** may exist in a different phase depending on whether the rod **108** is in the first state or second state. In a particular embodiment, when rod **108** is in the first state, the chalcogenide is in an amorphous or lower permittivity phase and forms a defect in crystal **102**. When rod **108** is in the second state, the chalcogenide is in a polycrystalline or higher permittivity phase, and no defect exists at the point where rod **108** is located in crystal **102**. In another embodiment, rod **108** may be polycrystalline in the first state and amorphous in the second state. Other state-phase combinations may be used without departing from the scope of the present invention. Also, materials having other phases and/or states may be used in crystal **102** without departing from the scope of the present invention. In addition, in this document, the terms "higher" and "lower" refer to relative values and do not correspond to particular ranges of values.

In one embodiment, the phase of the rod **108** that creates a defect may depend, at least in part, on the phases of the other rods **108** in crystal **102**. For example, if the rods **108** in crystal **102** are in a polycrystalline phase, a defect may be created in crystal **102** by changing at least one of the rods **108** to the amorphous phase. Similarly, if the rods **108** are in an amorphous phase, a defect may be created in crystal **102** by changing at least one of the rods **108** to the polycrystalline phase. While rods **108** may be described in other portions of this document as creating a defect in the amorphous phase, rods **108** may also create defects while in any other suitable phase.

Input lines **110** are operable to provide an input optical signal to crystal **102**, and output lines **112** are operable to receive an output optical signal from crystal **102**. The output signal received by output line **112** may be all or a portion of the input signal received by crystal **102** through input line **110** and routed through one or more waveguides **106** in crystal **102**. Input lines **110** and output lines **112** may comprise fibers, waveguides, free space coupling, focused

Copy provided by USPTO from the PIRS Image Database on 04-03-2003

optical beams, or any other structure operable to communicate optical energy. Input lines **110** and output lines **112** may have any suitable relationship between the lines. For example, input lines **110** and output lines **112** may have a one-to-one relationship, where each input line **110** is associated with one output line **112**. Input lines **110** and output lines **112** may also have a one-to-many relationship, a many-to-one relationship, a many-to-many relationship, or any other suitable type of relationship.

Controller **104** is coupled to crystal **102**. Controller **104** is operable to reconfigure crystal **102** by switching various rods **108** in crystal **102** between the first and second states of rods **108**. In one embodiment, rods **108** in crystal **102** comprise a reversible phase-changeable chalcogenide, where a first phase creates a defect in crystal **102** and a second phase does not create a defect in crystal **102**. In this embodiment, controller **104** may place a rod **108** in the first state by heating rod **108** and allowing rod **108** to cool at one rate. Controller **104** may also place a rod **108** in the second state by heating rod **108** and allowing rod **108** to cool at another rate. In a particular embodiment, rod **108** is amorphous in the first state and polycrystalline in the second state. In this embodiment, controller **104** may place rod **108** in the first state by heating rod **108** and allowing rod **108** to cool quickly, and controller **104** may place rod **108** in the second state by heating rod **108** and allowing rod **108** to cool gradually. In this document, the terms "quick" and "gradual" refer to relative time periods and are not meant to correspond to particular durations of time. Also, while controller **104** is described as changing the state of rod **108** by varying the heating and/or cooling rates of rod **108**, controller **104** may change the state of rod **108** and the optical characteristics of rod **108** using any other changes to the electrical and/or thermal profile of rod **108**. Further, controller **104** may heat and/or cool a rod **108** by directly heating and/or cooling rod **108**, by activating appropriate elements in crystal **102** to heat and/or cool rod **108**, or in any other suitable manner. In addition, in this document, the terms "cool" and "cooling" include, but are not limited to, actively reducing the temperature of a rod **108**, and passively allowing the temperature of a rod **108** to fall. For example, controller **104** may actively reduce the temperature of rod **108** by reducing the current flowing through rod **108** at a particular rate, and controller **104** may passively allow rod **108** to cool by eliminating the current flowing through rod **108**. Other methods of cooling rod **108** may be used without departing from the scope of the present invention. By placing a series of rods **108** in the first state, controller **104** may form different waveguides **106** in crystal **102**. Controller **104** may comprise any hardware, software, firmware, or combination thereof operable to reconfigure crystal **102**.

In a particular embodiment, controller **104** heats and cools a rod **108** in crystal **102** using an electric current. The electric current causes a rod **108** to heat, due to the resistance of rod **108**. The rate at which the rod **108** cools may depend on one or more characteristics of the current. For example, in one embodiment, a current having a larger amplitude and smaller duration may cause the rod **108** to cool quickly, while a current having a smaller amplitude and larger duration may cause the rod **108** to cool gradually. In this document, the terms "larger" and "smaller" refer to relative sizes and do not correspond to particular ranges of values. In another embodiment, the rate at which the electric current is reduced controls the rate at which rod **108** cools. Controller **104** may control which state rod **108** enters by varying the characteristics of the electric current. For example, to cause rod **108** to become polycrystalline, the current controlled by controller **104** may cause rod **108** to cool gradually, such as between approximately ten to approximately fifty nanoseconds. To cause rod **108** to become amorphous, the current controlled by controller **104** causes rod **108** to cool quickly, such as between approximately one to approximately two nanoseconds. As a result, different waveguides **106** may be formed in crystal **102** by heating and cooling rods **108** at these different rates. Other embodiments of switch **100** may be used without departing from the scope of the present invention. For example, controller **104** could switch the states of rods **108** using an optical beam, such as from a laser, or any other suitable structure or structures operable to switch the states of rods **108**.

Controller **104** may switch rods **108** in crystal **102** between the first and second states under the control of one or more input control signals received over control lines **114**. The control signals received over control lines **114** allow controller **104** to identify which rods **108** need to be in the first state and which rods **108** need to be in the second state. In one embodiment, controller **104** includes a library **116** containing a plurality of entries. Each entry corresponds to a configuration of waveguides **106** in crystal **102** to achieve a mapping between one or more input lines **110** and one or more output lines **112**. For example, an entry may identify which rods **108** should be in the first and second states to establish particular waveguides **106** in crystal **102**. In this embodiment, the control signals received over control lines **114** identify the entry in library **116** that should be used to reconfigure crystal **102**. Controller **104** accesses library **116**, identifies the selected entry in library **116**, and retrieves the identity of the rods **108** that should be in the first and/or second states. After identifying the states of the rods **108** in crystal **102**, controller **104** may reconfigure crystal **102**.

In another embodiment, controller **104** may use an algorithm **118** to determine the states of rods **108** in crystal **102**. When controller **104** receives control signals over control lines **114**, controller **104** processes the control signals using algorithm **118**. Algorithm **118** performs one or more operations on the control signals and identifies which rods **108** should be in the first state and/or the second state. After identifying the states of rods **108**, controller **104** may reconfigure crystal **102**. Other methods for identifying which rods **108** are to be placed in the first and second states may be used without departing from the scope of the present invention.

Controller **104** may be coupled to crystal **102** by one or more signal lines **120**. Signal lines **120** are operable to transport signals, such as electric currents or optical signals used to reconfigure rods **108**, to and from crystal **102**. In a particular embodiment, a switchable rod **108** may be coupled to at least two electrodes, and controller **104** may create a voltage differential across the electrodes using signal lines **120**. Signal lines **120** may comprise any suitable structure operable to communicate electrical signals used to reconfigure crystal **102**.

Although FIG. **1** illustrates one example of an optical switch **100**, other embodiments of switch **100** may be used without departing from the scope of the present invention. For example, any number of input lines **110**, output lines **112**, and control lines **114** may be used with switch **100**. Also, any number of rods **108** may be switchable between different states. Further, although FIG. **1** illustrates controller **104** and crystal **102** as separate components of switch **100**, controller **104** and crystal **102** could be combined into a single component. In addition, controller **104** and crystal **102** may be fabricated on a single substrate using any suitable technique or techniques to provide an integral photonic device.

Copy provided by USPTO from the PIRS Image Database on 04-03-2003

FIGS. 2A and 2B are block diagrams illustrating portions of an exemplary photonic crystal **200** constructed according to the teachings of the present invention. Photonic crystal **200** may be useful, for example, in optical switch **100** of FIG. **1**. In FIG. 2A, crystal **200** includes a plurality of rods **206** and a plurality of electrodes **204**. Other embodiments of crystal **200** may be used without departing from the scope of the present invention.

Rods **206** represent areas of crystal **200** that may reduce or eliminate the propagation of an optical signal through crystal **200** or that may allow the optical signal to propagate through a defect in crystal **200**. In one embodiment, at least one rod **206***a* may be fixed in the second state. These rods **206***a* reduce or eliminate the propagation of an optical signal through at least a portion of crystal **200**. At least one rod **206***b* may also be fixed in the first state. These rods **206***b* allow the propagation of the optical signal through at least a portion of crystal **200**. In one embodiment, rods **206***a* and rods **206***b* have different refractive indices. In a particular embodiment, rods **206***a* have a refractive index of approximately seven, and rods **206***b* have a refractive index of approximately four. Other state-refractive index combinations may be used without departing from the scope of the present invention.

At least one rod **206** in crystal **200**, such as rod **206***c,* is a switchable rod. In one state, rod **206***c* allows an optical signal to propagate through at least a portion of crystal **200**, and in another state rod **206***c* reduces the propagation of the optical signal through crystal **200**. The two states of rod **206***c* may correspond to different refractive indices of rod **206***c*. In a particular embodiment, when rod **206***c* is in the first state, the refractive index of rod **206***c* may be the same or similar to the refractive index of rods **206***b*. When rod **206***c* is in the second state, the refractive index of rod **206***c* may be the same or similar to the refractive index of rods **206***a*. Other materials having different refractive indices may be used without departing from the scope of the present invention.

In the illustrated embodiment, a series of rods **206***b* form a waveguide **214** in crystal **200**. Waveguide **214** represents a path where optical signals may exist in and propagate through crystal **200**. An optical signal may propagate through waveguide **214** until reaching branch **216**. Branch **216** represents an area where waveguide **214** divides into two waveguides **218***a* and **218***b*. One or more switchable rods **206***c* may make up the first portion of each waveguide **218**, and each waveguide **218** may also include one or more rods **206***b*. The state of the switchable rods **206***c* determines whether an optical signal propagating through waveguide **214** follows waveguide **218***a* and/or waveguide **218***b*. For example, in one embodiment, if switchable rods **206***c* in waveguide **218***a* are amorphous while switchable rods **206***c* in waveguide **218***b* are polycrystalline, optical signals would enter waveguide **218***a*. Switchable rods **206***c* in waveguide **218***b* would reduce the propagation of the signals through waveguide **218***b*. Similarly, if crystal **200** needs to route signals through waveguide **218***b,* electrodes **204** would switch switchable rods **206***c* in waveguide **218***a* to the polycrystalline phase and switchable rods **206***c* in waveguide **218***b* to the amorphous phase. Optical signals would then enter waveguide **218***b,* and switchable rods **206***c* in waveguide **218***a* would reduce the propagation of the signals through waveguide **218***a*. Rods **206***a* may surround at least a portion of waveguides **214** and **218**, which helps to conduct the optical signals through waveguides **214** and **218** and limit the conduction of the optical signals through other portions of crystal **200**. Because waveguides **218** may allow or reduce the propagation of optical signals based on the states of switchable rods **206***c,* waveguides **218** may be referred to as "switchable" waveguides or paths.

Rods **206** may comprise any suitable material or materials. In one embodiment, all rods **206** are composed of the same material operable to switch between at least a first state and a second state. In a particular embodiment, rods **206** comprise a reversible phase-changeable chalcogenide, such as $Ge_2Sb_2Te_5$. In one embodiment, the material forming rod **206***a* may be fixed in a higher-index phase, the material forming rod **206***b* may be fixed in a lower-index phase, and the material forming rod **206***c* may switch between phases. Because the material that forms rods **206***a* and **206***b* may be fixed in the higher-index phase and the lower-index phase, respectively, many of the rods **206** in crystal **200** may be configured to operate in the first or second states during fabrication of crystal **200**. This may reduce the number of switchable rods **206***c* in crystal **200** and simplify the operation of crystal **200**. This may also allow different waveguide geometries to be formed during fabrication of crystal **200**. For example, different waveguides can be formed in crystal **200** during fabrication by fixing at least some of the rods **206** in the lower-index or higher-index phases. At least one of the rods **206** may comprise a switchable rod **206***c,* which may be switched between states to route optical signals through different waveguides in crystal **200**. Any suitable number of rods **206***a* and **206***b* may be fixed in the higher-index or lower-index phases, and any suitable number of rods **206***c* may be switchable between states. In another embodiment, rods **206** may comprise different materials.

Background material **208** separates rods **206**. Background material **208** may comprise any suitable material or materials in one or multiple layers. Background material **208** may, for example, comprise a dielectric material such as silicon dioxide or air.

Electrodes **204** are coupled to at least one switchable rod **206***c*. Electrodes **204** are operable to change the state of one or more rods **206***c*. For example, in one embodiment, a defect may be formed in crystal **200** by heating and cooling rod **206***c* at one rate, and defects in crystal **200** may be removed by heating and cooling rod **206***c* at another rate. In a particular embodiment, rod **206***c* may be heated using an electric current. The rate at which the rod **206***c* cools may depend on one or more characteristics of the current, such as the amplitude, duration, and/or rate of reduction. In one embodiment, a pair of electrodes **204***a* and **204***b* may be coupled to a switchable rod **206***c*. In this embodiment, a voltage differential may be applied to the electrodes **204***a* and **204***b,* creating a current flowing through rod **206***c*. The current generates heat due to the resistance of rod **206***c*. In a particular embodiment, rod **206***c* is heated by applying a current for between approximately one and approximately two nanoseconds. To place the material forming rod **206***c* in an amorphous phase, rod **206***c* is cooled at a rate of between approximately one and approximately two nanoseconds. This may form a defect in crystal **200**. To place the material forming rod **206** in the polycrystalline phase, rod **206***c* is cooled at a rate of between approximately ten and approximately fifty nanoseconds. This may remove a defect from crystal **200**. Electrodes **204** may comprise any suitable material or materials in one or multiple layers. Electrodes **204** may, for example, comprise copper, gold, silver, and/or doped polysilicon. Although FIG. 2A illustrates one electrode **204***a* coupled to each rod **206***c* and one electrode **204***b* coupled to three rods **206***c,* other embodiments of crystal **200** may be used without departing from the scope of the present invention. For example, electrode **204** and/or electrode **204***b* may be coupled to any number of switchable rods **206***c*.

Copy provided by USPTO from the PIRS Image Database on 04-03-2003

The arrangement, size, and shape of rods **206** and the refractive indices of the materials in crystal **200** determine the optical characteristics of crystal **200**. For example, crystal **200** prevents light within a certain range or band of frequencies from propagating through crystal **200**, unless a defect is formed in crystal **200**. The center of the frequency range depends, at least in part, on the center-to-center distance **219** of rods **206**. In one embodiment, distance **219** is approximately 0.5 micrometers. By altering one or more characteristics of crystal **200**, such as the center-to-center distance **219** of rods **206** or any other suitable characteristics, a crystal **200** may be constructed having properties suitable for a particular application. For example, a crystal **200** having normalized bandgaps of fifteen to twenty-five percent or more is achievable, and localized states may exist near the center of the bandgaps. In one embodiment, the center-to-center distance **219** of rods **206** is 0.5 micrometers, the radius of rods **206** is 0.11 micrometers, the height of rods **206** is 0.6 micrometers, and the thickness of cladding **210** is 3 micrometers. This provides a normalized bandgap of approximately fifteen percent. In another embodiment, the center-to-center distance **219** of rods **206** is 0.5 micrometers, the radius of rods **206** is 0.08 micrometers, the height of rods **206** is 0.9 micrometers, and the thickness of cladding **210** is 3 micrometers. This provides a normalized bandgap of approximately twenty-five percent. Other embodiments of crystal **200** may be used without departing from the scope of the present invention.

Because crystal **200** in FIG. **2**A has a single branch **216** dividing waveguide **214** into two waveguides **218**, crystal **200** acts as a 1×2 optical switch. An input signal may take one of two paths through crystal **200**. Cascading the 1×2 switches produces a 1×N switch, meaning that an input signal may take one of N paths through the switch. Cascading N 1×N switches in parallel produces half of a N×N switch. In one embodiment, each 1×2 switch may occupy less than 10 square micrometers of space, and up to one million 1×2 switches may be placed in a square centimeter.

FIG. **2**B illustrates the cross-section of crystal **200** along line A—A in FIG. **2**A. As illustrated in FIG. **2**B, crystal **200** includes a waveguide area **202** and two electrodes **204***a* and **204***b*. Waveguide area **202** represents the area of crystal **200** where optical signals may be guided through waveguides in crystal **200**. In the illustrated embodiment, waveguide area **202** includes rods **206**, background material **208**, and a confinement cladding **210** disposed around rods **206**.

In the illustrated embodiment, confinement claddings **210***a* and **210***b* are disposed on top and bottom of rods **206**. Each confinement cladding **210** may confine optical signals traveling through crystal **200** to the region **212** in which rods **206** are located. This helps to prevent the optical signals from radiating out of crystal **200**. Confinement cladding **210** may comprise any suitable material or materials in one or multiple layers. In one embodiment, confinement cladding **210** comprises the same material as background material **208**, such as silicon dioxide. In another embodiment, confinement cladding **210** and background material **208** comprise different materials. In a particular embodiment, confinement cladding **210** may have a refractive index that is less than or equal to the refractive index of background material **208**.

Electrodes **204***a* and **204***b* may have any suitable size and/or shape in crystal **200**. In the illustrated embodiment, each electrode **204** protrudes through a confinement cladding **210** in order to contact rod **206***c*. In this embodiment, the use of a protruding electrode **204** may help to reduce the perturbation of crystal **200** caused by the presence of a conductive material within waveguide area **202** of crystal **200**. Other electrodes **204** may be used without departing from the scope of the present invention.

The crystal **200** illustrated in FIGS. **2**A and **2**B may be formed by any suitable process or processes. In one embodiment, rods **206** in crystal **200** may be formed using interference lithography. In a particular embodiment, after rods **206** are formed, one or more rods **206** may be fixed in the first state and one or more rods **206** may be fixed in the second state. By fixing at least some of rods **206** in the first and second states, different waveguides **214** and **218** may be formed in crystal **200**. One or more electrodes **204** may also be formed in crystal **200**, and electrodes **204** may be used to switch one or more rods **206** between the first and second states. By overlaying the electrodes on switchable rods **206**, the waveguides in crystal **200** may be reconfigured.

Although FIGS. **2**A and **2**B illustrate one embodiment of crystal **200**, various changes may be made to crystal **200** without departing from the scope of the present invention. For example, any suitable number of waveguides **214**, branches **216**, and waveguides **218** may be used in crystal **200**. Any number of rods **206** may be used in crystal **200**, and any number of rods **206** may be fixed in the first state and/or the second state. Also, any number of rods **206** may comprise switchable rods **206***c*, and any suitable number of switchable rods **206***c* may be used to block waveguides **218** in crystal **200**. Further, while FIG. **2**A illustrates rods **206** arranged in a triangular lattice within a planar region **212** of crystal **200**, other arrangements, such as rectangular and honeycomb lattices, may be used in crystal **200**. In addition, other methods may be used to change the state of rods **206***c* in place of electrodes **204**. For example, one or more Vertical Cavity Surface Emitting Lasers (VCSEL) and focusing lenses to target the lasers may be used to change the state of rods **206***c*. Other changes may be used without departing from the scope of the present invention.

FIGS. **3**A–**3**H are block diagrams illustrating an exemplary series of steps in manufacturing a photonic crystal **300**. The steps shown in FIGS. **3**A–**3**H are for illustration only. Other fabrication methods may be used without departing from the scope of the present invention.

In FIG. **3**A, a layer **322** of a conductive material is deposited on a substrate **320**. Substrate **320** may comprise any suitable material or materials in one or multiple layers, such as a layer of silicon. Layer **322** may comprise any suitable conductive material or materials in one or multiple layers, such as a layer of gold, silver, copper, and/or doped polysilicon. Layer **322** may be deposited on substrate **320** using any suitable method.

In FIG. **3**B, layer **322** is formed into the shape of an electrode **304***b*. Any suitable method, such as a pattern and etch, may be used to form electrode **304***b*. In FIG. **3**C, a layer **324** of a dielectric material is deposited on electrode **304***b*. Layer **324** may comprise any suitable dielectric material or materials in one or multiple layers, such as a layer of silicon dioxide. Layer **324** may be formed using any suitable method, such as chemical vapor deposition.

In FIG. **3**D, layer **324** is planarized, and a plurality of cavities **326** are formed in layer **324**. The cavities **326** may be formed to approximately conform to the shape of rods **206**. Cavities **326** could also be formed to any other suitable shape in crystal **300**. Cavities **326** may be formed in layer **324** using any suitable method, such as a pattern and etch, a photomask, or a three-beam interference lithography technique. Cavities **326** may have any suitable geometric pattern, such as a triangular, rectangular, or honeycomb

Copy provided by USPTO from the PIRS Image Database on 04-03-2003

lattice. In FIG. 3E, rods **306** are formed in cavities **326**. Rods **306** may, for example, be formed by depositing a layer of a chalcogenide in cavities **326** and then planarizing the material. This forms rods **306** separated by dielectric material **308** and a confinement cladding **310***b* disposed under rods **306**. Although FIG. 3E illustrates the material from layer **324** separating rods **306**, a different material than layer **324** could also be used. For example, layer **324** could be planarized, an additional material could be disposed on layer **324**, and cavities **326** could be formed in the additional layer.

One or more of rods **306** may be placed into the first state or the second state at this point. For example, rods **306***a* could be placed in the second state. Switchable rods **306***c* may or may not be initially placed in the first or second states at this step or later. Rods **306** could be placed in one of the states through laser irradiation or any other suitable method.

In FIG. 3F, a layer **328** of a dielectric material is deposited on rods **306**. Layer **328** may comprise any suitable dielectric material or materials in one or multiple layers, such as a layer of silicon dioxide. Layer **328** may be formed using any suitable method, such as chemical vapor deposition. In FIG. 3G, a cavity **330** is formed in layer **328**. The cavity **330** may be formed to approximately conform to the shape of electrode **204***a*. Cavity **330** may be formed in layer **328** using any suitable method, such as a pattern and etch. In FIG. 3H, electrode **304***a* is formed in cavity **330**. Electrode **304***a* may be formed, for example, by depositing a conductive material in and around cavity **330** and forming the material into electrode **304***a*.

Although FIGS. 3A–3H illustrate an exemplary series of steps in the formation of a photonic crystal **300**, various changes may be made to the series of steps without departing from the scope of the present invention. For example, in another embodiment, an optical device may use one or more lasers to switch switchable rods **306***c* from one state to another, and electrodes **304** need not be formed in crystal **300**. Also, other suitable fabrication techniques may be used to form crystal **300** without departing from the scope of the present invention.

FIGS. 4A and 4B are timing diagrams illustrating the reconfiguration of a photonic crystal according to the teachings of the present invention. Although FIGS. 4A and 4B are described with respect to crystal **200** of FIGS. 2A and 2B, the same or similar timing may be used in crystal **102** of FIG. 1, crystal **300** of FIGS. 3A through 3H, and any other suitable photonic crystal.

In FIG. 4A, timing diagram **400** illustrates how a current applied to a rod **206** changes the temperature of rod **206**, which causes a change in the phase of the material forming rod **206**. The current applied to rod **206** may, for example, be delivered to rod **206** by a controller, such as controller **104**, through one or more signal lines **120** and associated electrodes **204**. The material in rod **206** may have a first phase **402**, which creates a defect in crystal **200**, and a second phase **404**, which does not form a defect in crystal **200**. In the illustrated embodiment, a rod **206** in the first phase **402** is amorphous, and a rod **206** in the second phase **404** is polycrystalline. Other phase-defect combinations may be used without departing from the scope of the present invention.

As shown in FIG. 4A, to place the material in rod **206** in the first phase **402**, a current **406** is applied to rod **206** for a time **408**. This may include, for example, a controller such as controller **104** providing a square wave to one of the electrodes **204** coupled to rod **206**. In one embodiment, current **406** is applied to rod **206** for a time **408** of between one to two nanoseconds. The amplitude of current **406** may depend, at least in part, on the amount of material forming rod **206**. Current **406** increases the temperature **410** of rod **206** during a time **412**. Time **412** may, for example, be between one and two nanoseconds. In one embodiment, current **406** increases temperature **410** of rod **206** to the melting point of rod **206**. In a particular embodiment, rod **206** comprises a chalcogenide such as $Ge_2Sb_2Te_5$, and current **406** heats rod **206** to at least 620° Centigrade. This causes the material in rod **206** to enter a third phase **405** in which the material in rod **206** becomes liquid. After time **412**, the temperature **410** of rod **206** decreases during a time **414**. In one embodiment, time **414** represents a time of one to two nanoseconds. Because the temperature **410** of rod **206** falls quickly, the material in rod **206** enters the first phase **402**, and a defect is formed in crystal **200**.

To place the material in rod **206** in the second phase **404**, a current **416** is applied to rod **206** for a time **418**. This may include controller **104** providing a square wave to one of the electrodes **204** coupled to rod **206**. In one embodiment, current **416** is applied to rod **206** for a time **418** of between ten to fifty nanoseconds. Current **416** increases the temperature **420** of rod **206** during a time **422**. Time **422** may, for example, be between one and two nanoseconds. This may cause the material in rod **206** to enter the liquid phase **405**. The temperature **420** of rod **206** then decreases during a time **424**. In one embodiment, time **424** represents a time of ten to fifty nanoseconds. This reduces the temperature **420** of rod **206** gradually, placing the material in rod **206** in the second phase **404**. As a result, no defect is formed in crystal **200** at the location of rod **206**.

In FIG. 4B, timing diagram **450** illustrates how another current applied to rod **206** changes the temperature of rod **206** and the phase of the material forming rod **206**. Rod **206** may have a first phase **452**, which creates a defect in crystal **200**, and a second phase **454**, which does not form a defect in crystal **200**. In the illustrated embodiment, rod **206** is amorphous in the first phase **452** and polycrystalline in the second phase **454**. Other phase-defect combinations may be used without departing from the scope of the present invention.

As shown in FIG. 4B, to place the material in rod **206** in the first phase **452**, a current **456** is applied to rod **206** for a time **458**. This may include, for example, creating a voltage differential between the electrodes **204** coupled to rod **206** to establish current **456** through rod **206**. After that, current **456** is reduced during a time **460**. In one embodiment, time **458** and time **460** each represents a period of one to two nanoseconds. The amplitude of current **456** may depend, at least in part, on the amount of material forming rod **206**. Current **456** causes the temperature **462** of rod **206** to increase during a time **464** and then decrease during time **466**. In one embodiment, current **456** increases temperature **462** of rod **206** to the point where the material in rod **206** melts and enters a liquid phase **455**. In a particular embodiment, time **464** and time **466** each represents a time of one to two nanoseconds. Because the temperature **462** of rod **206** falls quickly, the material in rod **206** enters the first phase **452**, and a defect is formed in crystal **200**.

To place the material in rod **206** in the second phase **454**, a current **468** is applied to rod **206** for a time **470**, and current **468** is reduced during a time **472**. In one embodiment, time **470** represents a period of one to two nanoseconds, and time **472** represents a time of ten to fifty nanoseconds. Current **468** causes the temperature **474** of rod **206** to increase during a time **476** and then decrease during time **478**. In one embodiment, time **476** represents a period of one to two

Copy provided by USPTO from the PIRS Image Database on 04-03-2003

nanoseconds, and time **478** represents a period of ten to fifty nanoseconds. The current **468** causes the material in rod **206** to enter the liquid phase **455**, and the gradual reduction in temperature **474** of rod **206** causes the material in rod **206** to enter the second phase **454**. As a result, no defect is formed at rod **206** in crystal **200**.

While FIGS. **4**A and **4**B illustrate example currents that may be used to reconfigure a rod **206**, various changes may be made to FIGS. **4**A and **4**B without departing from the scope of the present invention. For example, the currents, times, temperatures, and phases shown in FIGS. **4**A and **4**B are for illustration only. Other and/or additional currents, times, temperatures, and/or phases may be used without departing from the scope of the present invention. Also, while the material in rods **206** is shown to have three phases, rods **206** may be formed from a material having any suitable number of phases. Further, any suitable currents may be used to heat rods **206** and/or cool rods **206**. In one embodiment, any currents operable to allow rod **206** to cool at different rates and enter different phases may be used without departing from the scope of the present invention.

FIG. **5** is a flow diagram illustrating an exemplary method **500** for reconfiguring an optical switch according to the teachings of the present invention. Although FIG. **5** is described with respect to crystal **200** of FIGS. **2**A and **2**B, the same or similar method may be used by switch **100** of FIG. **1**, crystal **300** of FIGS. **3**A through **3**H, or any other suitable optical switch.

A controller or other logic, such as a controller **104**, determines the desired path through crystal **200** at step **502**. This may include, for example, determining how an optical signal is to be routed through the waveguides **214** and **218** in crystal **200**. The controller or other logic determines if crystal **200** is configured correctly at step **504**. This may include, for example, determining if a waveguide **214** branches toward the desired waveguide **218** in crystal **200**.

If crystal **200** is configured correctly, method **500** ends. Crystal **200** does not need to be reconfigured. Otherwise, controller **104** retrieves a path-to-rod mapping from memory at step **505**. The path-to-rod mapping may, for example, be stored as an entry in library **116** or computed by algorithm **118**. Controller **104** heats the switchable rods **206***c* along the desired path in crystal **200** at step **506**. The desired path may represent one of the waveguides **218** that travels through crystal **200** in the proper direction, such as a waveguide **218** leading toward the final destination of the optical signal. The switchable rods **206***c* along the desired path may be heated, for example, by applying a current to the rods **206***c* through the electrodes **204** coupled to the rods **206***c*. The current may last for any suitable length of time, such as one to two nanoseconds. The switchable rods **206***c* along the desired path are cooled quickly at step **508**. This may include, for example, controller **104** cooling the rods **206***c* quickly by controlling at least one of the duration of the current, the amplitude of the current, and the rate at which the current is reduced. Because of the quick cooling rate, switchable rods **206***c* enter the first state at step **510**. The material that forms rods **206***c* may, for example, enter an amorphous phase, and defects form at the locations of switchable rods **206***c*. This reconfigures crystal **200** by opening the desired path through crystal **200**.

Controller **104** also heats the switchable rods **206***c* along the undesired path in crystal **200** at step **512**. The undesired path may represent one of the waveguides **218** that travels through crystal **200** in an improper direction, such as a waveguide **218** that diverges from the desired path and leads away from the final destination of the optical signal. The switchable rods **206***c* along the undesired path may be heated, for example, by applying a current to the rods **206***c*. The switchable rods **206***c* along the undesired path are cooled gradually at step **514**. This may include, for example, controller **104** cooling the rods **206***c* gradually by controlling at least one of the duration of the current, the amplitude of the current, and the rate at which the current is reduced. Because of the gradual cooling rate, switchable rods **206***c* enter the second state at step **516**. The material that forms rods **206***c* may, for example, enter a polycrystalline phase, and defects are removed from crystal **200**. This reconfigures crystal **200** by closing the undesired paths through crystal **200**. At this point, crystal **200** has been reconfigured to guide an optical signal in a desired path through crystal **200**. At a branch **216** in crystal **200**, the desired path has been opened and the undesired path has been closed.

Although FIG. **5** illustrates one example of a method **500** for reconfiguring an optical switch, various changes may be made to method **500** without departing from the scope of the present invention. For example, although FIG. **5** illustrates a series of steps **506–516** to reconfigure crystal **200**, various steps may be performed in parallel. As a particular example, steps **506–510** that open the desired path through crystal **200** could be performed in parallel with steps **512–516** that close the undesired path through crystal **200**.

Although the present invention has been described with several embodiments, a number of changes, substitutions, variations, alterations, and modifications may be suggested to one skilled in the art, and it is intended that the invention encompass all such changes, substitutions, variations, alterations, and modifications that fall within the spirit and scope of the appended claims.

What is claimed is:

1. A photonic crystal, comprising:

a first path comprising a plurality of first regions, at least one of the first regions set to a first state to allow an optical signal to propagate through at least a portion of the crystal;

a second path comprising a plurality of second regions, at least one of the second regions set to the first state;

a third path coupling the first path and the second path and providing the optical signal for propagation through at least one of the first and second paths;

a first actuator coupled to at least one of the first regions, the first actuator operable to switch the first region between the first state and a second state, the second state reducing the propagation of the optical signal through at least a portion of the crystal; and

a second actuator coupled to at least one of the second regions, the second actuator operable to switch the second region between the first state and the second state.

2. The photonic crystal of claim **1**, wherein the first region is amorphous in the first state and polycrystalline in the second state.

3. The photonic crystal of claim **1**, wherein:

the first region enters the first state when heated and then cooled at a first rate; and

the first region enters the second state when heated and then cooled at a second rate.

4. The photonic crystal of claim **3**, wherein:

the first rate is between approximately one and approximately two nanoseconds; and

the second rate is between approximately ten and approximately fifty nanoseconds.

Copy provided by USPTO from the PIRS Image Database on 04-03-2003

5. The photonic crystal of claim 1, wherein the first actuator comprises two electrodes coupled to the first region.

6. The photonic crystal of claim 5, wherein a current flowing through the first actuator switches the first region between the first state and the second state.

7. The photonic crystal of claim 6, wherein the current is generated by creating a voltage differential between the electrodes.

8. The photonic crystal of claim 6, wherein:

the current heats the first region; and

the first region enters the first state or the second state based on a rate at which the first region cools.

9. The photonic crystal of claim 8, wherein the rate at which the first region cools depends on at least one of an amplitude of the current, a duration of the current, and a rate at which the current is reduced.

10. The photonic crystal of claim 1, wherein the first and second regions comprise a chalcogenide.

11. The photonic crystal of claim 1, wherein the first and second regions comprise $Ge_2Sb_2Te_5$.

12. The photonic crystal of claim 1, wherein the first and second regions comprise rods.

13. The photonic crystal of claim 1, wherein the first and second regions are planar.

14. The photonic crystal of claim 1, further comprising at least one confinement cladding disposed around the first and second regions and operable to reduce the propagation of the optical signal through the cladding.

15. The photonic crystal of claim 1, wherein the first and second regions form a triangular lattice.

16. The photonic crystal of claim 1, wherein the crystal has a normalized bandgap of between fifteen percent and twenty five percent.

17. The photonic crystal of claim 1, wherein the crystal has an area of ten square micrometers or less.

18. An optical switch, comprising:

a photonic crystal comprising:

a first path comprising a plurality of first regions, at least one of the first regions set to a first state to allow an optical signal to propagate through at least a portion of the crystal;

a second path comprising a plurality of second regions, at least one of the second regions set to the first state;

a third path coupling the first path and the second path and providing the optical signal for propagation through at least one of the first and second paths;

a first actuator coupled to at least one of the first regions; and

a second actuator coupled to at least one of the second regions; and

a controller coupled to the first and second actuators, the controller operable to switch the first and second regions between the first state and a second state, the second state reducing the propagation of the optical signal through at least a portion of the crystal.

19. The optical switch of claim 18, wherein:

the first region enters the first state when heated and then cooled at a first rate; and

the first region enters the second state when heated and then cooled at a second rate.

20. The optical switch of claim 19, wherein:

the first rate is between approximately one and approximately two nanoseconds; and

the second rate is between approximately ten and approximately fifty nanoseconds.

21. The optical switch of claim 18, wherein:

the first actuator comprises two electrodes coupled to the first region; and

the controller is operable to generate a voltage differential across the electrodes to create a current that heats the first region.

22. The optical switch of claim 21, wherein:

the first region enters the first state or the second state based on a rate at which the first region cools; and

the rate at which the first region cools depends on at least one of an amplitude of the current, a duration of the current, and a rate at which the current is reduced.

23. The optical switch of claim 18, wherein the first and second regions comprise a chalcogenide.

24. The optical switch of claim 18, wherein the controller is operable to determine the state of the first and second regions based on an input control signal.

25. The optical switch of claim 18, wherein:

the first, second, and third paths form a 1×2 switch;

the crystal comprises at least one million 1×2 switches; and

the switches have a combined area of one square centimeter or less.

26. A method for reconfiguring an optical switch, comprising:

selecting a first path through a photonic crystal, the crystal comprising the first path and a second path, the first path comprising a plurality of first regions, the second path comprising a plurality of second regions, the crystal also comprising a third path coupling the first path and the second path and providing an optical signal for propagation through one of the first and second paths;

heating at least one of the first regions and at least one of the second regions;

cooling the first region at a first rate to place the first region in a first state, the first state allowing propagation of the optical signal through at least a portion of the crystal; and

cooling the second region at a second rate to place the second region in a second state, the second state reducing the propagation of the optical signal through at least a portion of the crystal.

27. The method of claim 26, wherein:

the first rate is between approximately one and approximately two nanoseconds; and

the second rate is between approximately ten and approximately fifty nanoseconds.

28. The method of claim 26, wherein the first and second regions comprise a chalcogenide.

29. The method of claim 26, further comprising receiving an input control signal; and

wherein selecting the first path through the photonic crystal comprises selecting the first path using the input control signal.

30. The method of claim 26, wherein heating at least one of the first regions comprises generating a current through the first region.

31. The method of claim 30, wherein:

two electrodes are coupled to the first region; and

generating the current through the first region comprises generating a voltage differential across the electrodes.

32. The method of claim 30, wherein:

the first region enters the first state or the second state based on a rate at which the first region cools; and

Copy provided by USPTO from the PIRS Image Database on 04-03-2003

the rate at which the first region cools depends on at least one of an amplitude of the current, a duration of the current, and a rate at which the current is reduced.

33. A photonic crystal, comprising:

a first path comprising a plurality of first rods, at least one of the first rods comprising a chalcogenide and set to a first state;

a second path comprising a plurality of second rods, at least one of the second rods comprising a chalcogenide and set to the first state;

a third path coupling the first path and the second path and providing an optical signal for propagation through at least one of the first and second paths;

at least one first electrode coupled to at least one of the first rods and operable to switch the first rod between the first state and a second state;

at least one second electrode coupled to at least one of the second rods and operable to switch the second rod between the first state and the second state;

the first state allowing propagation of the optical signal through at least a portion of the crystal, the first and second rods entering the first state when heated and then cooled at a rate of between approximately one and approximately two nanoseconds;

the second state reducing the propagation of the optical signal through at least a portion of the crystal, the first and second rods entering the second state when heated and then cooled at a rate of between approximately ten and approximately fifty nanoseconds;

the first rod heated by an electric current flowing through the first electrode, the second rod heated by an electric current flowing through the second electrode, the rate at which the first and second rods cool depending on at least one of an amplitude of the current, a duration of the current, and a rate at which the current is reduced.

34. An optical switch, comprising:

a photonic crystal comprising:

a first path comprising a plurality of first rods, at least one of the first rods comprising a chalcogenide and set to a first state;

a second path comprising a plurality of second rods, at least one of the second rods comprising a chalcogenide and set to the first state;

a third path coupling the first path and the second path and providing an optical signal for propagation through at least one of the first and second paths;

at least one first electrode coupled to at least one of the first rods and operable to switch the first rod between the first state and a second state;

at least one second electrode coupled to at least one of the second rods and operable to switch the second rod between the first state and the second state;

the first state allowing propagation of the optical signal through at least a portion of the crystal, the first and second rods entering the first state when heated and then cooled at a rate of between approximately one and approximately two nanoseconds; and

the second state reducing the propagation of the optical signal through at least a portion of the crystal, the first and second rods entering the second state when heated and then cooled at a rate of between approximately ten and approximately fifty nanoseconds; and

a controller operable to switch the first and second rods between the first state and the second state, the controller operable to heat at least one of the first or second rods by generating a current through the first or second electrodes, the controller operable to cool the rod at at least two rates by varying at least one of an amplitude of the current, a duration of the current, and a rate at which the current is reduced.

35. A method for reconfiguring an optical switch, comprising:

selecting a first path through a photonic crystal, the crystal comprising the first path and a second path, the first path comprising a plurality of first rods, the second path comprising a plurality of second rods, the first and second rods comprising a chalcogenide, the crystal also comprising a third path coupling the first path and the second path and providing an optical signal for propagation through one of the first and second paths;

generating a current through at least one of the first rods and a current through at least one of the second rods, the currents operable to heat the rods;

cooling the first rod at a rate of between approximately one and approximately two nanoseconds to place the first rod in a first state, the first state allowing propagation of the optical signal through at least a portion of the crystal;

cooling the second rod at a rate of between approximately ten and approximately fifty nanoseconds to place the second rod in a second state, the second state reducing the propagation of the optical signal through at least a portion of the crystal; and

the rate at which a rod cools depending on at least one of an amplitude of the current flowing through the rod, a duration of the current flowing through the rod, and a rate at which the current flowing through the rod is reduced.

* * * * *

Copy provided by USPTO from the PIRS Image Database on 04-03-2003